Veidoo S500



Brief Introduction Beta 2.5	The Veidoo S500 DLP projector has 2000 Ansi-Lumen, a contrast of 2000:1 and a SVGA 800 x 600 resolution. The projector will be able to illuminate a picture width of 389 cm well. However, if room light is available, the image width should ideally not exceed 259 cm. This model is no longer offered by Veidoo.
Display Type	1 x 0,55" DLP Chip SVGA 4/3 Ti Digital Light Processing Chip
Projector Ansi-Lumen	2000
Projector Contrast	2000:1 full on/off
Projector Black Level	1,0000 min. Lumen
Projector Offset	-
Screen	667 Lux (bei 200 cm Screen) 2000:1 full on/off 0,334 min. Lumen
Resolution	SVGA 800 x 600 480.000 Pixel
Video Modes	PAL, SECAM, NTSC, HDTV 720p, 1080i, EDTV 480p, 576p
Application	Standard-Portabel | External training and company presentations, as well as product presentations. Medium screen width or rooms with little light, max. 100 lumens.
Light Source	180W Lamp
Light Life	-
Operating Costs	-
Focus	Manual
Zoom	Manual
Objective	-
Throw Ratio	-
Audio	-
Connections	D-sub 15 pin in S-Video in Cinch Video in
Ceiling Mounting	-
Power	230W
Size WxHxD	271 x 90 x 223 mm (10,7"x3,5"x8,8") 5,44 L/dm³
Operating Noise	32 / 30 dB in Eco Mode
Weight	2,70 kg / 5,95 lbs.
Keystone	-
Illumination	-
Frequenz	H-sync: 31-79 kHz V-sync: 50-85 Hz
Foot-Lamberts	62 fL / max. 389 cm screen width 212 cd/m²
Features	■ Eco Mode
Status	2008 Discontinued (EOL) // Last update of the data: 2023-08-04
Data	

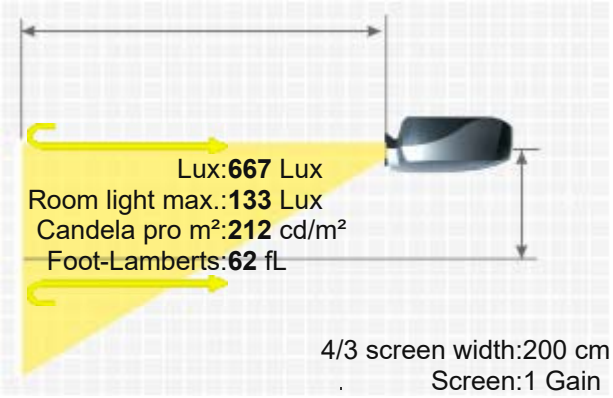

VEIDOO S500

More Details

HCinema

https://www.projector-database.com/pro/veidoos500-en.html

Due to our ongoing commitment to continuously improve the quality of our projector database, this brochure is also subject to change without notice. HCinema is not responsible for any errors or omissions contained in product descriptions.