Telex P400



Motor

Brief Introduction Beta 2.5	The P400 LCD has 400 Ansi lumens, a contrast of 100:1 and an SVGA 800 x 600 resolution. 400 Ansi lumens ensure that a picture width of 174 cm is also possible. However, if room light is available, the picture should be a maximum of 116 cm wide. The projector is no longer sold by the manufacturer. Unfortunately, we can no longer offer replacement lamps for this model, neither originals nor replicas.
Display Type	LCD TFT Panel SVGA 4/3 Liquid Crystal Display
Ansi-Lumen	Projector: 400 — Screen: 129 Lux (bei 203 cm Screen)
Contrast	Projector: 100:1 full on/off — Screen: 100:1 full on/off
Black Level	Projector: 4,0000 min. Lumen — Screen: 1.33 min. Lumen
Offset	-
Resolution	SVGA 800 x 600 480.000 Pixel
Video Modes	NTSC, PAL, SECAM
Application	Standard-Portabel | External training and company presentations, as well as product presentations. Very narrow picture width and rooms with very little light.
Light Source	Metalldampf Lamp Articel Nr.: MHL-1
Light Life	2000 h.
Operating Costs	-
Focus	Powered
Zoom	Powered
Objective	-
Throw Ratio	-
Audio	Mono
Connections	1 x S-Video 3 x Cinch Stereo in 1 x out 2 x Cinch Video D-sub 15pin in und out RS232C Mini Jack in
Ceiling Mounting	-
Power	-
Size WxHxD	-
Operating Noise	-
Weight	-
Keystone	-
Illumination	-
Frequenz	-
Foot-Lamberts	12 fL / max. 174 cm screen width 41 cd/m²

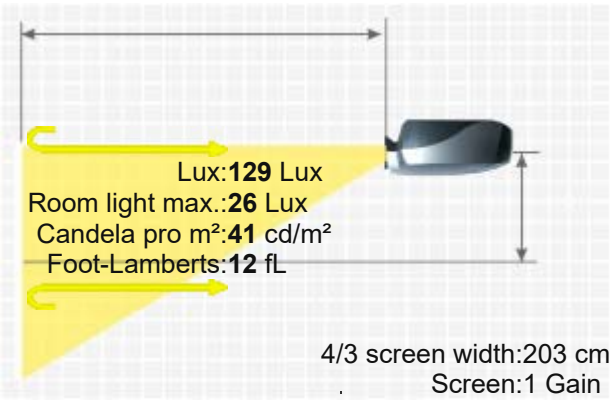

TELEX P400

Features	-
Status	- Discontinued (EOL) // Last update of the data: 2023-08-04
Data	

More Details



HCinema

https://www.projector-database.com/pro/telexp400-en.html

Due to our ongoing commitment to continuously improve the quality of our projector database, this brochure is also subject to change without notice. HCinema is not responsible for any errors or omissions contained in product descriptions.