Synco Spectra Media 2300

Display Type	[redacted] -		
Ansi-Lumen	Projector 1600	Screen	533 Lux (bei 200 cm Screen)
Contrast	-		-
Black Level	-		-
Offset	-		
Resolution	SVGA 800 x 600 480.000 Pixel		
Video Modes	PAL, SECAM		
Application	Stationary | Permanent installation in the training room and meeting room as well as the conference room. Small screen width, rooms with very little ambient light below 100 lumens.		
Light Source	-		
Light Life	-		
Operating Costs	-		
Focus	-		
Zoom	-		
Objective	-		
Throw Ratio	-		
Audio	-		
Connections	-		
Ceiling Mounting	-		
Power	-		
Size WxHxD	-		
Operating Noise	-		

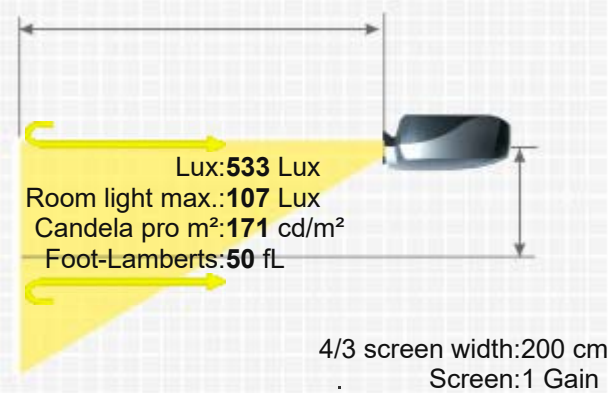

Weight	7,80 kg / 17,2 lbs.
Keystone	-
Illumination	-
Frequenz	-
Foot-Lamberts	50 fL / max. 348 cm screen width 171 cd/m²
Features	-
Status	2002 Discontinued (EOL) // Last update of the data: 2023-08-04
Data	

More Details

https://www.projector-database.com/pro/syncoSpectraMedia2300-en.html

Due to our ongoing commitment to continuously improve the quality of our projector database, this brochure is also subject to change without notice. HCinema is not responsible for any errors or omissions contained in product descriptions.

SYNCO SPECTRA MEDIA 2300