Plus U7 132hSF



Brief Introduction Beta 2.5	A brief introduction to the Plus U7 132hSF. The DLP projector has an XGA 1024 x 768 resolution and a contrast of 2000:1. An image width of up to 515 cm is possible as the projector has 3500 Ansi lumens. The projector creates rooms with residual light with a smaller image width, max. 343 cm is recommended. This model is no longer offered by Plus.
Display Type	1 x 0,7" DLP Chip XGA 4/3 Ti Digital Light Processing Chip
Ansi-Lumen	Projector: 3500 / 2800 im Eco Mode — Screen: 1167 Lux (bei 200 cm Screen)
Contrast	Projector: 2000:1 full on/off — Screen: 2000:1 full on/off
Black Level	Projector: 1,7500 min. Lumen — Screen: 0,584 min. Lumen
Offset	
Resolution	XGA 1024 x 768 786.432 Pixel SXGA 1280 x 1024 compressed
Video Modes	PAL, PAL-M, PAL-N, PAL-60, SECAM, NTSC, EDTV HDTV 720p, 1080i,
Application	Standard-Portabel | External training and company presentations, as well as product presentations. Medium screen width or rooms with a little more ambient light, max. 200 lumens.
Light Source	300W Lamp Articel Nr.: 28-057
Light Life	2000 h. 3000 h. in Eco Mode
Operating Costs	-
Focus	Manual
Zoom	Manual 1,2
Objective	F=2,6-2,8 f=22,1-25,6 mm
Throw Ratio	1,55-1,80:1
Audio	0,5W
Connections	DVI-I D-sub 15pin in und out Cinch Video in S-Video in Mini Jack USB Tyb B RS232C
Ceiling Mounting	Yes
Power	430 / 360W in Eco Mode
Size WxHxD	258 x 83 x 320 mm (10,2"x3,3"x12,6") 6,85 L/dm³
Operating Noise	-

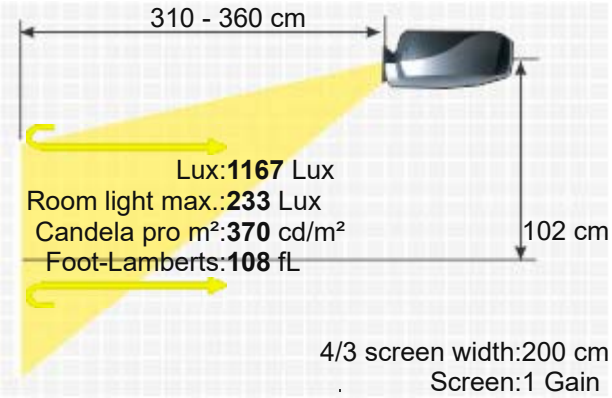

PLUS U7 132HSF

Weight	3,00 kg / 6,61 lbs.
Keystone	Vertical
Illumination	80%
Frequenz	H-sync: 15-80 kHz V-sync: 50-85 Hz
Foot-Lamberts	108 fL / max. 515 cm screen width 370 cd/m²
Features	■ Freeze ■ Eco Mode ■ Kensington Slot ■ Gamma correction ■ Password protection ■ Remote control with laser pointer und mouse control ■ Wi-Fi network compatible. ■ Digital Zoom ■ Presentation Timer

Optional	
Bulb only	NLMP2980
Lamp ruby	Ruby-LMP2980
Lamp original	28-057
Compatible lamp	LMP-K16326
Universal Remote original	Fernb-uni-V3

Status: Order here: https://www.hcinema.de/lampen/shop-en.php?id=n4889
2005 Discontinued (EOL) // Last update of the data: 2023-08-04

Data



More Details

HCinema
https://www.projector-database.com/pro/plusu7132hsf-en.html

Due to our ongoing commitment to continuously improve the quality of our projector database, this brochure is also subject to change without notice. HCinema is not responsible for any errors or omissions contained in product descriptions.