# Planar PR6022



| | |
|---|---|
| Brief Introduction<br>Beta 2.5 | A brief introduction to the PR6022: The Planar BrilliantColor DLP projector offers 2500 Ansi lumens, a contrast of 1800:1 and an XGA 1024 x 768 resolution. The projector can illuminate an image width of up to 435 cm thanks to its 2500 Ansi lumens. In room light, however, the image width should ideally be less than 290 cm. The projector was launched in 2008 and is no longer sold by the manufacturer. |
| Display Type | 1 x DLP Chip<br>XGA 4/3 Ti Digital Light Processing Chip |
| Ansi-Lumen | Projector: 2500 / Screen: 833 Lux (bei 200 cm Screen) |
| Contrast | Projector: 1800:1 full on/off / Screen: 1800:1 full on/off |
| Black Level | Projector: 1,3889 min. Lumen / Screen: 0,464 min. Lumen |
| Offset | |
| Resolution | XGA 1024 x 768<br>786.432 Pixel<br>UXGA 1600 x 1200 compressed |
| Video Modes | PAL, SECAM, NTSC, HDTV 720p, 1080i, EDTV 480p, 576p |
| Application | Micro-Portabel \| Mobile presentations and external training.<br>Medium screen width or rooms with little light, max. 100 lumens. |
| Light Source | 200W Lamp<br>Articel Nr.: 997-5505-00 |
| Light Life | 2000 h. 3000 h. in Eco Mode |
| Operating Costs | - |
| Focus | Manual |
| Zoom | Manual 1,16 |
| Objective | - |
| Throw Ratio | 1,9-2,2:1 |
| Audio | 1W Mono |
| Connections | D-sub 15 pin in<br>S-Video in<br>Cinch Video in<br>USB Typ B<br>Mini Jack Audio in |
| Ceiling Mounting | - |
| Power | 260W / 5W standby |
| Size WxHxD | 220 x 71 x 178 mm (8,7"x2,8"x7") 2,78 L/dm³ |
| Operating Noise | 34 dB in Eco Mode |
| Weight | 1,45 kg / 3,2 lbs. |
| Keystone | Vert.: +/-15° |
| Illumination | - |
| Frequenz | H-sync: 15-80 kHz<br>V-sync: 43-87 Hz |
| Foot-Lamberts | 77 fL / max. 435 cm screen width<br>264 cd/m² |

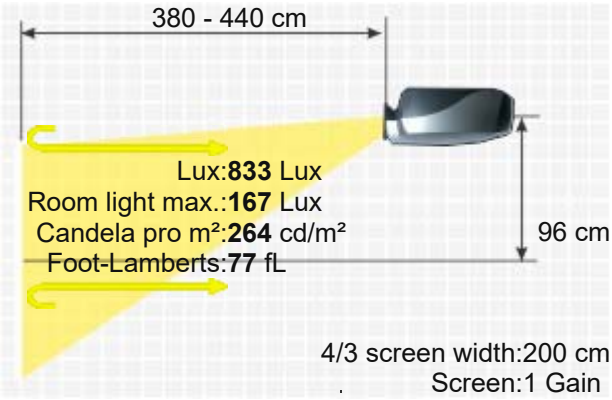


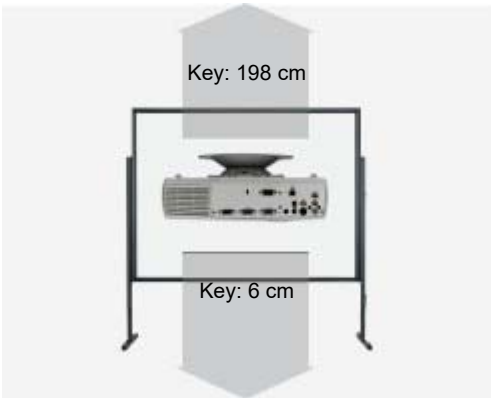

| | |
|---|---|
| Features | ■ Freeze<br>■ Eco Mode<br>■ Kensington Slot<br>■ Gamma correction<br>■ Password protection<br>■ BrilliantColor™<br>■ Remote control with laser pointer<br>■ Overscan adjustable<br>■ Digital Zoom<br>■ 5-segment 2-speed colour wheel. |
| Optional | Lamp ruby — Ruby-LMP18874<br>Lamp original — 997-5505-00<br>Order here: https://www.hcinema.de/lampen/shop-en.php?id=d18874 |
| Status Data | 2008 Discontinued (EOL) // Last update of the data: 2023-08-04 |
| More Details | https://www.projector-database.com/pro/planarpr6022-en.html |

Due to our ongoing commitment to continuously improve the quality of our projector database, this brochure is also subject to change without notice. HCinema is not responsible for any errors or omissions contained in product descriptions.