OTHA V7



With the V7, manufacturer OTHA offers a DLP LED projector with WXGA 1280 x 800 resolution and a contrast of 2000:1. The manufacturer OTHA specifies a service life of 30,000 hours, which is equivalent to over 20.5 years at 4 hours per day. Due to the brightness of 600 Ansi lumens, a picture width of 249 cm is possible. In room light, the picture should be max. 166 cm wide. The model recognizes Airplay, Miracast Screen Mirroring signals, so it is possible to play videos with high resolution and surround sound directly via WLAN from a smartphone, tablet or PC (Android, Windows and iOS). The projector can also play 1080P and 4K (compressed) without any problems.

Brief Introduction Beta 2.5			
Display Type	1 x 0,45" DMD DLP Chip WXGA 16/10 Ti Digital Light Processing Chip		
	Projector		Screen
Ansi-Lumen	600		240 Lux (bei 200 cm Screen)
Contrast	2000:1 full on/off		2000:1 full on/off
Black Level	0,3000 min. Lumen		0,12 min. Lumen
Offset	-		
Resolution	WXGA 1280 x 800 1.024.000 Pixel UHD (4K2K) 3840 x 2160 compressed		
Video Modes	Pal, SECAM, NTSC, HDTV 720p, 1080i, 1080p, 4K UHD (komprimiert), EDTV 480p, 576p		
3D Compatibility	Frame Sequential (3D Ready)		
Application	Micro-Portabel | Small mobile presentations.. Small screen width, rooms with very little ambient light below 100 lumens.		
Light Source	LED		
Light Life	30000 h.		
Operating Costs	0,00 € LED		
Focus	Manual		
Zoom	No Zoom		
Objective	-		
Throw Ratio	1,4:1		
Audio	2 x 5W		
Connections	HDMI in SD Karte Mini Jack Audio in und out 2x USB in RJ45		

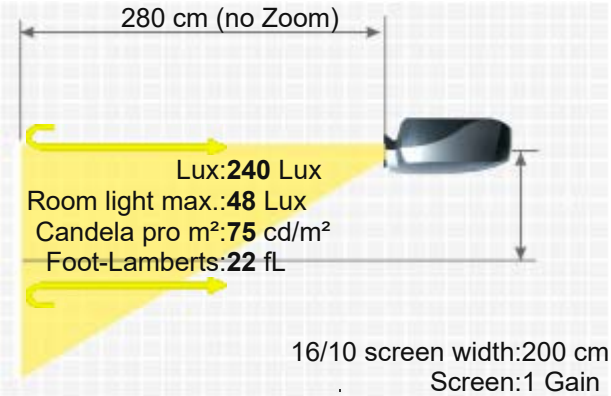



Ceiling Mounting	Yes
Power	35W
Size WxHxD	220 x 46 x 127 mm (8,7"x1,8"x5") 1,29 L/dm³
Operating Noise	-
Weight	0,754 kg / 0 lbs.
Keystone	-
Illumination	-
Frequenz	-
Foot-Lamberts	22 fL / max. 249 cm screen width 75 cd/m²
Features	■ Full HD 1080P compatible ■ Wi-Fi network compatible. ■ Lan network compatible. ■ Android
Status	2022 Current model // Last update of the data: 2024-05-16
Data	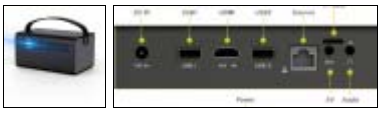
More Details	https://www.projector-database.com/pro/othav7-en.html

Due to our ongoing commitment to continuously improve the quality of our projector database, this brochure is also subject to change without notice. HCinema is not responsible for any errors or omissions contained in product descriptions.