Microtek CX4



Brief Introduction Beta 2.5	The stationaryMicrotek CX4 LCD projector has 2000 Ansi lumens, a contrast of 400:1 and an XGA 1024 x 768 resolution. A picture width of up to 389 cm is possible. However, the image should be smaller in room light. We recommend max. 259 cm. It is no longer offered by the manufacturer Microtek.
Display Type	3 x 0,9 LCD TFT Panel mit MLA XGA 4/3 Liquid Crystal Display with Micro Lense Array

Projector		Screen	
Ansi-Lumen	2000		647 Lux (bei 203 cm Screen)
Contrast	400:1 full on/off		400:1 full on/off
Black Level	5,0000 min. Lumen		1.63 min. Lumen
Offset	-		

Resolution	XGA 1024 x 768 786.432 Pixel SXGA 1280 x 1024 compressed
Video Modes	NTSC, PAL, SECAM
Application	Stationary | Permanent installation in the training room and meeting room as well as the conference room. Medium screen width or rooms with little light, max. 100 lumens.
Light Source	200W SHP Lamp
Light Life	2000 h.
Operating Costs	-
Focus	Manual
Zoom	Manual 1,3
Objective	-
Throw Ratio	-
Audio	2 x 2W
Connections	DVI in D-sub 15pin in und out S-Video in Cinch Video in USB Typ A Mini Jack in
Ceiling Mounting	-
Power	300W standby 22W
Size WxHxD	320 x 114 x 260 mm (12,6"x4,5"x10,2") 9,48 L/dm³
Operating Noise	40dB
Weight	-
Keystone	Vert.: +/-15°
Illumination	80%
Frequenz	H-sync: 15-91 kHz V-sync: 56-85 Hz
Foot-Lamberts	60 fL / max. 389 cm screen width 206 cd/m²

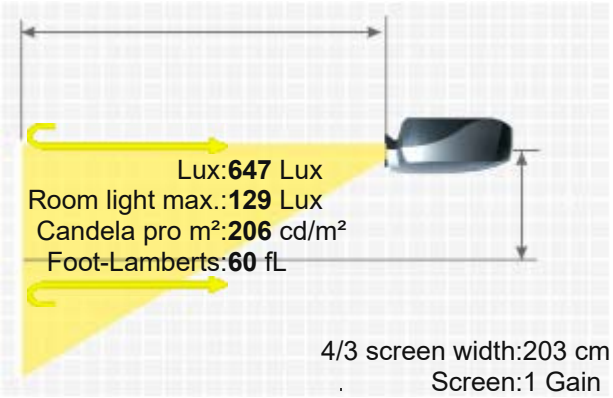

MICROTEK CX4

Features	Freeze
Status	- Discontinued (EOL) // Last update of the data: 2023-08-04
Data	

More Details

https://www.projector-database.com/pro/microtekcx4-en.html

Due to our ongoing commitment to continuously improve the quality of our projector database, this brochure is also subject to change without notice. HCinema is not responsible for any errors or omissions contained in product descriptions.