Medium X1100



MEDIUM X1100

Brief Introduction Beta 2.5	With the X1100, manufacturer Medium offers a standard portable DLP projector with XGA 1024 x 768 resolution and a contrast of 500:1. An image width of up to 289 cm is possible as the projector has 1100 Ansi lumens. However, if room light is available, the picture should be max. 193 cm wide. It is no longer offered by the manufacturer Medium.
Display Type	1 x 0,7" 12° DLP Chip XGA 4/3 Ti Digital Light Processing Chip
Ansi-Lumen	Projector: 1100 / Screen: 356 Lux (bei 203 cm Screen)
Contrast	Projector: 500:1 full on/off / Screen: 500:1 full on/off
Black Level	Projector: 2,2000 min. Lumen / Screen: 0.716 min. Lumen
Offset	
Resolution	XGA 1024 x 768 786.432 Pixel SXGA 1280 x 1024 compressed
Video Modes	(NTSC 4,43, M), (PAL B,D,G,H,I), (SECAM B,D,G,K,K1,L)
Application	Standard-Portabel | External training and company presentations, as well as product presentations. Small screen width, rooms with very little ambient light below 100 lumens.
Light Source	130W P-VIP Lamp Articel Nr.: X1100
Light Life	2000 h.
Operating Costs	-
Focus	Manual
Zoom	Manual 1,2
Objective	F=2,2-2,4 f=28,51-34,21 mm
Throw Ratio	2,0-2,4:1
Audio	1 x 2W Mono
Connections	1 x D-sub 15pin 1 x Cinch (Composite), 1 x Hosiden (S-VIDEO), 1 x Komponente (über VGA) 1 x Klinke (Stereo für VGA) 1 x Klinke (Stereo für Video)
Ceiling Mounting	Yes
Power	180W
Size WxHxD	225 x 52 x 176 mm (8,9"x2"x6,9") 2,06 L/dm³
Operating Noise	35dB
Weight	1,50 kg / 3,31 lbs.
Keystone	Vert.: +/-16°
Illumination	85%
Frequenz	H-sync: 15-100 kHz V-sync: 43-120 Hz Range max.: 140 MHz
Foot-Lamberts	33 fL / max. 289 cm screen width 113 cd/m²

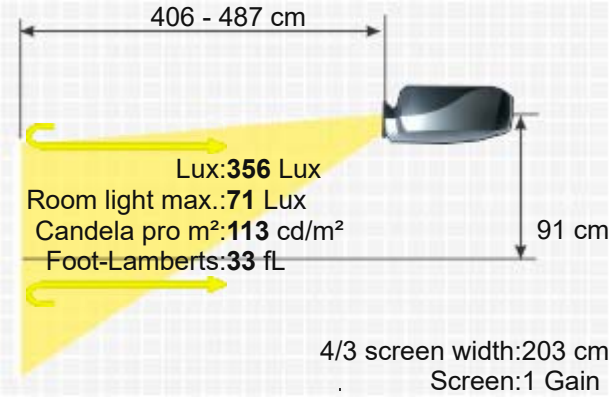



Features	■ Freeze ■ Kensington Slot ■

Optional	
Bulb only	NLMP2282
Lamp ruby	Ruby-LMP2282
Lamp original	LMP2282
Compatible lamp	LMP-K2282

Order here: https://www.hcinema.de/lampen/shop-en.php?id=n2282

Status Data - Discontinued (EOL) // Last update of the data: 2023-08-04

More Details https://www.projector-database.com/pro/mediumx1100-en.html

Due to our ongoing commitment to continuously improve the quality of our projector database, this brochure is also subject to change without notice. HCinema is not responsible for any errors or omissions contained in product descriptions.