# Light Blue Optics Light Touch Projector



Pocket

| | | | |
|---|---|---|---|
| Display Type | [redacted] - | | |
| Ansi-Lumen | Projector 35 | Screen | 16 Lux (bei 200 cm Screen) |
| Contrast | Projector - | Screen | - |
| Black Level | Projector - | Screen | - |
| Offset | - | | |
| Resolution | WVGA 800 x 480<br>384.000 Pixel | | |
| Video Modes | - | | |
| Application | Game-Portabel \| Very portable, small-screen projections.<br>Very narrow picture width and rooms with very little light. | | |
| Light Source | - | | |
| Light Life | - | | |
| Operating Costs | - | | |
| Focus | - | | |
| Zoom | - | | |
| Objective | - | | |
| Throw Ratio | - | | |
| Audio | - | | |
| Connections | - | | |
| Ceiling Mounting | - | | |
| Power | - | | |
| Size WxHxD | 35 x 98 x 165 mm (1,4"x3,9"x6,5") 0,57 L/dm³ | | |
| Operating Noise | - | | |

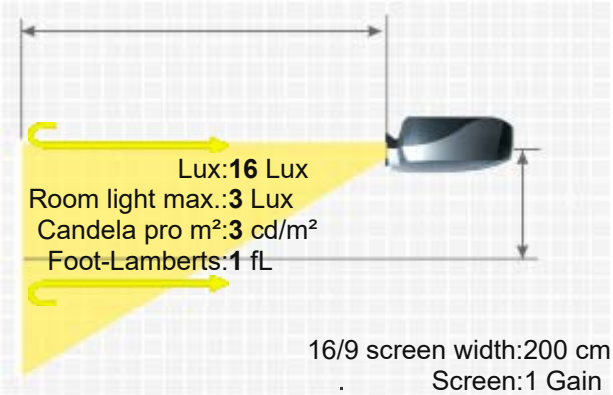


| | |
|---|---|
| Weight | 0,400 kg / 0,88 lbs. |
| Keystone | - |
| Illumination | - |
| Frequenz | - |
| Foot-Lamberts | 1 fL / max. 60 cm screen width<br>3 cd/m² |
| Features | - |
| Status | 2010 Discontinued (EOL) // Last update of the data: 2023-08-04 |
| Data | |

More Details

HCinema

https://www.projector-database.com/pro/lightblueopticslighttouchprojector-en.html

LIGHT BLUE OPTICS LIGHT TOUC

Due to our ongoing commitment to continuously improve the quality of our projector database, this brochure is also subject to change without notice. HCinema is not responsible for any errors or omissions contained in product descriptions.