JAVES AMT S250STD









Brief Introduction Beta 2.5	A brief introduction to the JAVES AMT S250STD. The short-throw DLP projector has an SVGA 800 x 600 resolution and a contrast of 1500:1. This projector has a projection ratio of just 0.61:1. For a 2 m wide image, the projector only needs to be 122 cm away from the screen. It is no longer offered by the manufacturer JAVES.
Display Type	 1 x 0,55" DLP Chip SVGA 4/3 Ti Digital Light Processing Chip
Ansi-Lumen	Projector: 2500 / Screen: 833 Lux (bei 200 cm Screen)
Contrast	Projector: 1500:1 full on/off / Screen: 1500:1 full on/off
Black Level	Projector: 1,6667 min. Lumen / Screen: 0,556 min. Lumen
Offset	-
Resolution	SVGA 800 x 600 480.000 Pixel SXGA 1280 x 1024 compressed
Video Modes	PAL, SECAM, NTSC, HDTV 720p, 1080i, EDTV 480p, 576p
Disc Recognition	DVD | HD Blu-ray (komprimiert) | ~~3D Blu-ray~~ | ~~4K UHD Blu-ray~~
Application	Short Distance | Medium screen width or rooms with little light, max. 100 lumens.
Light Source	230W Lamp
Light Life	-
Operating Costs	-
Focus	Manual
Zoom	No Zoom
Objective	-
Throw Ratio	0,61:1
Audio	2W x 2
Connections	DVI D-sub 15 pin in und out S-Video in Cinch Video in USB RS232C
Ceiling Mounting	-
Power	330W
Size WxHxD	-
Operating Noise	35dB
Weight	3,00 kg / 6,61 lbs.
Keystone	Vert.: +/-15°
Illumination	-
Frequenz	H-sync: 15-110 kHz V-sync: 50-800 Hz
Foot-Lamberts	77 fL / max. 435 cm screen width 264 cd/m²

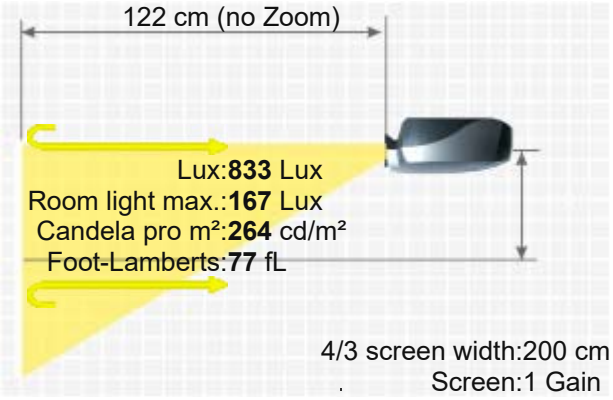

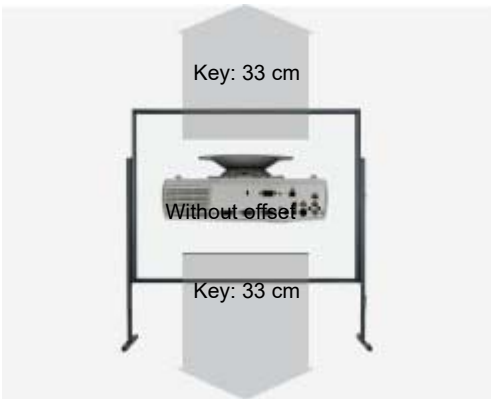

JAVES AMT S250STD

Features	■ Password protection ■ Short-throw projector
Status	- Discontinued (EOL) // Last update of the data: 2023-08-04
Data	
More Details	https://www.projector-database.com/pro/javesamts250std-en.html

Due to our ongoing commitment to continuously improve the quality of our projector database, this brochure is also subject to change without notice. HCinema is not responsible for any errors or omissions contained in product descriptions.