Fuss FP-319



DLP | Media Player | LED | USB

Brief Introduction Beta 2.5	The FP-319 LED DLP projector from Fuss has 200 Ansi lumens and a WXGA 1280 x 800 resolution. The lifespan of the LEDs is 20000 hours, which is over 13.7 years with a daily viewing time of 4 hours. The integrated media player allows files to be played directly. 144 cm picture width, the projector will be able to illuminate well. However, if room lighting is available, the picture width should ideally not exceed 96 cm. The model built in 2013 is no longer offered by Fuss.
Display Type	1 x DLP Chip WXGA 16/10 Ti Digital Light Processing Chip
Ansi-Lumen	Projector: 200 / Screen: 80 Lux (bei 200 cm Screen)
Contrast	Projector: - / Screen: -
Black Level	Projector: - / Screen: -
Offset	-
Resolution	WXGA 1280 x 800 1.024.000 Pixel
Video Modes	Pal, SECAM, NTSC, HDTV 720p, 1080i, EDTV 480p, 576p **Media player formats:** MKV WMV MPG DAT MPEG AVI MOV MP4 JPEG BMP GIF PNG TXT PDF
Application	Game-Portabel | Very portable, small-screen projections. Very narrow picture width and rooms with very little light.
Light Source	LED
Light Life	20000 h.
Operating Costs	0,00 € LED
Focus	Manual
Zoom	No Zoom
Objective	-
Throw Ratio	-
Audio	2 x 1W
Connections	HDMI in D-Sub 15 pin in Cinch Video in USB in Micro SD Slot in
Ceiling Mounting	-
Power	-
Size WxHxD	170 x 37 x 110 mm (6,7"x1,5"x4,3") 0,69 L/dm³
Operating Noise	-
Weight	0,578 kg / 1,27 lbs.
Keystone	-
Illumination	-
Frequenz	-
Foot-Lamberts	7 fL / max. 144 cm screen width

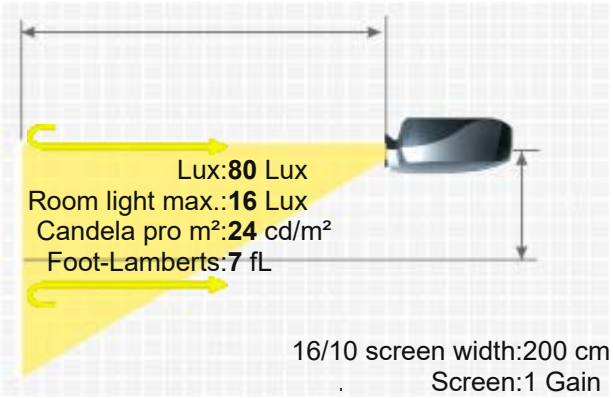

FUSS FP-319

	24 cd/m²
Features	■ Integrated Mediaplayer
Status	2013 Discontinued (EOL) // Last update of the data: 2024-08-21
Data	

More Details

https://www.projector-database.com/pro/fussfp319-en.html

Due to our ongoing commitment to continuously improve the quality of our projector database, this brochure is also subject to change without notice. HCinema is not responsible for any errors or omissions contained in product descriptions.