Enthronic E950X



ENTHRONIC E950X

Brief Introduction Beta 2.5	The standard portable E950X LCD has 2000 Ansi lumens, a contrast of 400:1 and an XGA 1024 x 768 resolution. Due to the brightness of 2000 Ansi lumens, a picture width of 389 cm is possible. In room light, the picture should be max. 259 cm wide. This model is no longer offered by Enthronic.
Display Type	3 x 0,9" LCD TFT Panel XGA 4/3 Liquid Crystal Display
Projector Ansi-Lumen	2000
Contrast	400:1 full on/off
Black Level	5,0000 min. Lumen
Offset	-
Screen Ansi-Lumen	647 Lux (bei 203 cm Screen)
Contrast	400:1 full on/off
Black Level	1.63 min. Lumen
Resolution	XGA 1024 x 768 786.432 Pixel SXGA 1280 x 1024 compressed
Video Modes	HDTV,480p,720p,1080i,NTSC / NTSC4.43 / PAL / PAL-M / PAL-N / SECAM
Application	Standard-Portabel | External training and company presentations, as well as product presentations. Medium screen width or rooms with little light, max. 100 lumens.
Light Source	200W UHL Lamp
Light Life	2000 h.
Operating Costs	-
Focus	Manual
Zoom	Manual 1,3
Objective	F=1,7 f=38-49 mm
Throw Ratio	2,08-2,68:1
Audio	1 x 1W
Connections	D-sub 15pin input HDB15 Female x 2 (2 , when passthrough is disable ,default 1) Monitor Output HDB15 Female x1(When passthrough is enable) Video Input RCA (C-Video), Mini-Din (S-Video) Audio Input Stereo Jack x 2(PC), RCA Jack x2 (Video) Audio Output Stereo Jack x1 Control I/O 8 Pins Din, Female x 2 Power Input 3 Pins Jack
Ceiling Mounting	Yes
Power	210W standby: 15W
Size WxHxD	305 x 87 x 240 mm (12"x3,4"x9,4") 6,37 L/dm³
Operating Noise	38dB
Weight	3,70 kg / 8,16 lbs.
Keystone	Vert.: +/-15°
Illumination	90%
Frequenz	H-sync: 15,6-91 kHz V-sync: 50-100 Hz
Foot-Lamberts	60 fL / max. 389 cm screen width 206 cd/m²

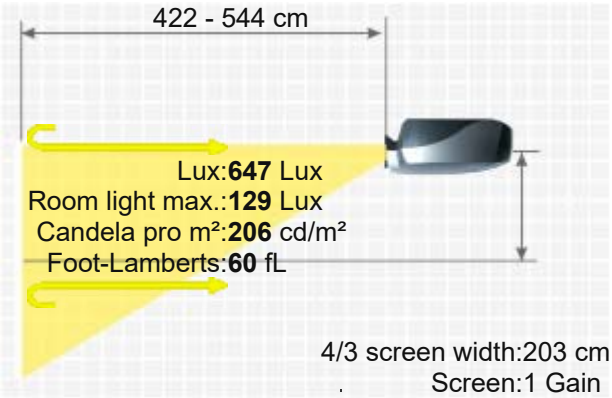

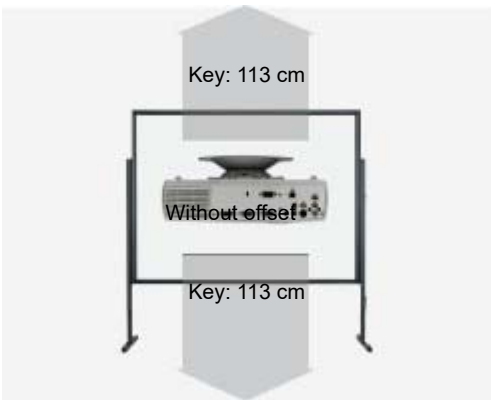

Features	■ 3:2 pull down
Status	- Discontinued (EOL) // Last update of the data: 2023-08-04

Data



More Details

https://www.projector-database.com/pro/enthronice950x-en.html

Due to our ongoing commitment to continuously improve the quality of our projector database, this brochure is also subject to change without notice. HCinema is not responsible for any errors or omissions contained in product descriptions.