Daewoo DSR 70P1LS



Brief Introduction Beta 2.5	The Daewoo model DSR 70P1LS is an LCD projector with SVGA 800 x 600 resolution and a contrast of 400:1. The projector can illuminate a picture width of 289 cm well. However, if room light is available, the picture width should ideally not exceed 193 cm. This model is no longer offered by Daewoo.		
Display Type	3 x 0,7" LCD TFT Panel SVGA 4/3 Liquid Crystal Display		
	Projector		Screen
Ansi-Lumen	1100		356 Lux (bei 203 cm Screen)
Contrast	400:1 full on/off		400:1 full on/off
Black Level	2,7500 min. Lumen		0.897 min. Lumen
Offset	-		
Resolution	SVGA 800 x 600 480.000 Pixel XGA 1024 x 768 compressed		
Video Modes	NTSC, PAL, SECAM Pal 60 NTSC 4,43		
Application	Standard-Portabel | External training and company presentations, as well as product presentations. Small screen width, rooms with very little ambient light below 100 lumens.		
Light Source	- Lamp		
Light Life	1500 h.		
Operating Costs	-		
Focus	Manual		
Zoom	Manual 1,3		
Objective	-		
Throw Ratio	-		
Audio	1 x 2W		
Connections	DVI in YUV in D-sub 15pin out Cinch Video in Cinch Stereo in S-Video in Control in		
Ceiling Mounting	Yes		
Power	-		
Size WxHxD	270 x 70 x 210 mm (10,6"x2,8"x8,3") 3,97 L/dm³		
Operating Noise	-		
Weight	-		
Keystone	-		
Illumination	-		
Frequenz	-		
Foot-Lamberts	33 fL / max. 289 cm screen width 113 cd/m²		

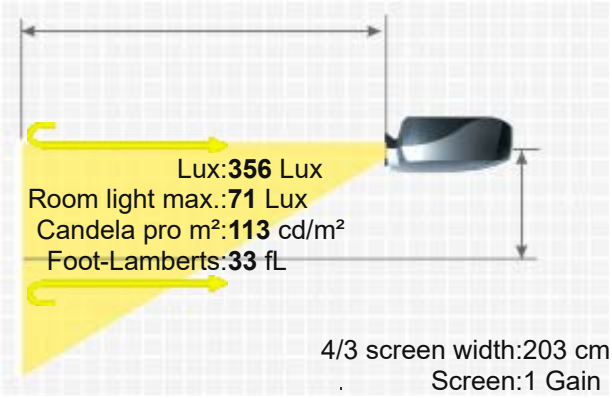

DAEWOO DSR 70P1LS

Features	-
Status	- Discontinued (EOL) // Last update of the data: 2023-08-04

Data




More Details

HCinema

https://www.projector-database.com/pro/daewoodsr70P1LS-en.html

Due to our ongoing commitment to continuously improve the quality of our projector database, this brochure is also subject to change without notice. HCinema is not responsible for any errors or omissions contained in product descriptions.