COMAOGO X10



Brief Introduction Beta 2.5	The X10 LED LCD has 350 Ansi lumens and an HDTV 1920 x 1080 resolution. Thanks to the LEDs, the projector has a light life of up to 30,000 hours, which is over 20.5 years if enjoyed for four hours a day. Thanks to the brightness of 350 Ansi lumens, a picture width of 190 cm is possible. In room light, the picture should be max. 127 cm wide. The model recognizes Airplay, Miracast Screen Mirroring signals, so it is possible to play videos with high resolution and surround sound directly via WLAN from a smartphone, tablet or PC (Android, Windows and iOS). Thanks to the Bluetooth function, the projector can also be flexibly paired with other speakers. Playing 1080P and 4K (compressed) is also no problem for the projector. With an operating noise of just 25 decibels, the model is very quiet compared to others.
Display Type	1 x LCD Panel HDTV 16/9 Liquid Crystal Display
Ansi-Lumen	Projector: 350 / Screen: 156 Lux (bei 200 cm Screen)
Contrast	Projector: - / Screen: -
Black Level	Projector: - / Screen: -
Offset	-
Resolution	HDTV 1920 x 1080 2.073.600 Pixel UHD (4K2K) 3840 x 2160 compressed
Video Modes	Pal, SECAM, NTSC, HDTV 720p, 1080i, 1080p, 4K UHD (komprimiert), EDTV 480p, 576p
Application	Game-Portabel | Very portable, small-screen projections. Very narrow picture width and rooms with very little light.
Light Source	LED
Light Life	30000 h.
Operating Costs	0,00 € LED
Focus	Automatic
Zoom	No Zoom
Objective	-
Throw Ratio	-
Audio	2 x 5W
Connections	HDMI in Mini Jack Audio in und out USB in Bluetooth 5.2
Ceiling Mounting	Yes
Power	-
Size WxHxD	104,9 x 159,8 x 129,8 mm (4,1"x6,3"x5,1") 2,13 L/dm³
Operating Noise	25dB

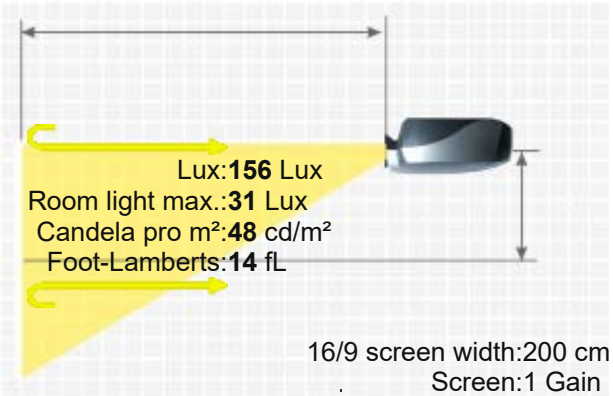

COMAOGO X10

Weight	1,31 kg / 2,2 lbs.
Keystone	-
Illumination	-
Frequenz	-
Foot-Lamberts	14 fL / max. 190 cm screen width 48 cd/m²
Features	■ Full HD 1080P compatible ■ Wi-Fi network compatible. ■ Android 10.0
Status	2023 Current model // Last update of the data: 2024-10-02
Data	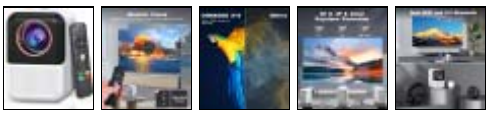
More Details	HCinema https://www.projector-database.com/pro/comaogox10-en.html

Due to our ongoing commitment to continuously improve the quality of our projector database, this brochure is also subject to change without notice. HCinema is not responsible for any errors or omissions contained in product descriptions.