Chatani TC-2000

CHATANI TC-2000

Brief Introduction Beta 2.5	The standard portable TC-2000 LCD projector from Chatani has 720 Ansi lumens, a contrast of 200:1 and an XGA 1024 x 768 resolution. 720 Ansi lumens ensure that a picture width of 234 cm is also possible. However, if room light is available, the picture should be max. 156 cm wide. This model is no longer offered by Chatani.
Display Type	3 x LCD TFT Panel XGA 4/3 Liquid Crystal Display
Projector: Ansi-Lumen	720
Projector: Contrast	200:1 full on/off
Projector: Black Level	3,6000 min. Lumen
Screen	233 Lux (bei 203 cm Screen) 200:1 full on/off 1.183 min. Lumen
Offset	-
Resolution	XGA 1024 x 768 786.432 Pixel SXGA 1280 x 1024 compressed
Video Modes	NTSC, PAL, SECAM, NTSC 4.43, PAL-M, PAL-N
Application	Standard-Portabel | External training and company presentations, as well as product presentations. Small screen width, rooms with very little ambient light below 100 lumens.
Light Source	- Lamp
Light Life	2000 h.
Operating Costs	-
Focus	Manual
Zoom	No Zoom
Objective	-
Throw Ratio	-
Audio	1 x 1W
Connections	-
Ceiling Mounting	Yes
Power	-
Size WxHxD	-
Operating Noise	-
Weight	-
Keystone	-
Illumination	-
Frequenz	H-sync: 15,7-81,1 kHz V-sync: 50-85 Hz
Foot-Lamberts	22 fL / max. 234 cm screen width 75 cd/m²
Features	-
Status Data	- Discontinued (EOL) // Last update of the data: 2023-08-04

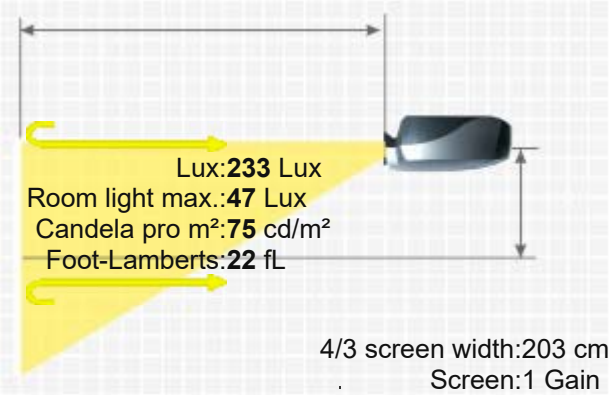

More Details

https://www.projector-database.com/pro/chatanitc2000-en.html

Due to our ongoing commitment to continuously improve the quality of our projector database, this brochure is also subject to change without notice. HCinema is not responsible for any errors or omissions contained in product descriptions.