Bauer VP 2000



Brief Introduction Beta 2.5	The VP 2000 LCD has 400 Ansi lumens, a contrast of 100:1 and a resolution. The projector can illuminate a picture width of up to 174 cm well thanks to the 400 Ansi lumens. In room light, however, the image width should ideally be less than 116 cm. This model is no longer offered by Bauer.		
Display Type	3 x LCD TFT Panel 3x 4/3 Liquid Crystal Display		
Ansi-Lumen	Projector: 400	Screen: 129 Lux (bei 203 cm Screen)	
Contrast	Projector: 100:1 full on/off	Screen: 100:1 full on/off	
Black Level	Projector: 4,0000 min. Lumen	Screen: 1.33 min. Lumen	
Offset	-		
Resolution	3 x 100980 Pixel		
Video Modes	NTSC, PAL, SECAM		
Application	Stationär | Permanent installation in the training room and meeting room as well as the conference room. Very narrow picture width and rooms with very little light.		
Light Source	150W Metalldampflampe Articel Nr.: LMPf14740		
Light Life	2000 h.		
Operating Costs	-		
Focus	Manual		
Zoom	Manual 1,83		
Objective	F=4,5 f=145-265 mm		
Throw Ratio	-		
Audio	-		
Connections	S-Video: (1) Mini DIN 4-pin Video: (1) RCA jack Scart in		
Ceiling Mounting	-		
Power	220W		
Size WxHxD	251 x 253 x 618 mm (9,9"x10"x24,3") 39,24 L/dm³		
Operating Noise	-		
Weight	14,00 kg / 30,86 lbs.		
Keystone	-		
Illumination	-		
Frequenz	-		
Foot-Lamberts	12 fL / max. 174 cm screen width 41 cd/m²		
Features	-		
Status	- Discontinued (EOL) // Last update of the data: 2023-08-04		
Data			

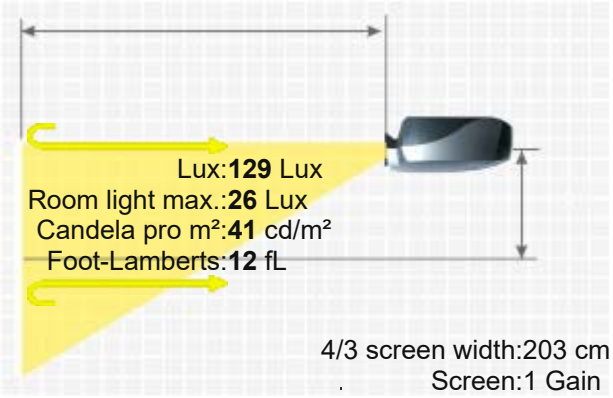

BAUER VP 2000

More Details

HCinema

https://www.projector-database.com/pro/bauervp2000-en.html

Due to our ongoing commitment to continuously improve the quality of our projector database, this brochure is also subject to change without notice. HCinema is not responsible for any errors or omissions contained in product descriptions.