Ampro EV 3600



Display Type	 8 Zoll EMF CRT 4/3 Elektromagnetisch Fokussierte Röhre		
Ansi-Lumen	Projector 220 1000 peak white	Screen	71 Lux (bei 203 cm Screen)
Contrast	-		-
Black Level	-		-
Offset	-		
Resolution	1600 x 1280 pixels		
Video Modes	NTSC, PAL, SECAM		
Application	CRT Projection | Very narrow picture width and rooms with very little light.		
Light Source	CRT Röhre		
Light Life	ca. 10000 - 20000 h. (je nach Anwendung)		
Operating Costs	-		
Focus	Manual		
Zoom	No Zoom		
Objective	-		
Throw Ratio	-		
Audio	-		
Connections	-		
Ceiling Mounting	-		
Power	800W		
Size WxHxD	-		
Operating Noise	-		

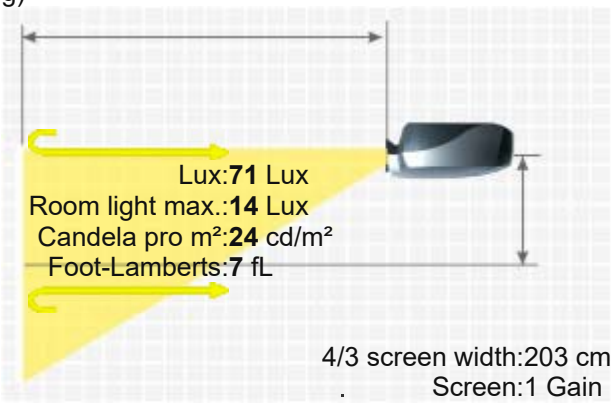

Weight	74,00 kg / 163,14 lbs.
Keystone	-
Illumination	-
Frequenz	H-sync: 15-105 kHz V-sync: 40-100 Hz
Foot-Lamberts	7 fL / max. 129 cm screen width 24 cd/m²
Features	-
Status	- Discontinued (EOL) // Last update of the data: 2023-08-04
Data	

More Details

HCinema

https://www.projector-database.com/pro/amproev3600-en.html

Due to our ongoing commitment to continuously improve the quality of our projector database, this brochure is also subject to change without notice. HCinema is not responsible for any errors or omissions contained in product descriptions.

AMPRO EV 3600