Ally C5



ALLY C5

Brief Introduction Beta 2.5	The C5 LED DLP projector from Ally has 500 Ansi lumens, a contrast of 20000:1 and a WXGA 1280 x 800 resolution. Thanks to the LEDs, the projector has a light life of up to 50,000 hours, which is equivalent to over 34.2 years at 4 hours per day. The projector can illuminate a picture width of up to 227 cm with its 500 Ansi lumens. In room light, however, the picture width should ideally be less than 151 cm. At just 28 decibels, the device is one of the quieter projectors. The model was built by Ally in 2012 and is no longer current.
Display Type	1 x 0,45" DLP Chip WXGA 16/10 Ti Digital Light Processing Chip
Ansi-Lumen	Projector: 500 / Screen: 200 Lux (bei 200 cm Screen)
Contrast	Projector: 20000:1 full on/off / Screen: 20000:1 full on/off
Black Level	Projector: 0,0250 min. Lumen / Screen: 0,01 min. Lumen
Offset	-
Resolution	WXGA 1280 x 800 1.024.000 Pixel
Video Modes	Pal, SECAM, NTSC, HDTV 720p, 1080i, EDTV 480p, 576p
Application	Micro-Portabel | Small mobile presentations.. Very narrow picture width and rooms with very little light.
Light Source	LED
Light Life	50000 h.
Operating Costs	0,00 € LED
Focus	Manual
Zoom	No Zoom
Objective	-
Throw Ratio	-
Audio	1 x 1W
Connections	2 x HDMI in D-sub 15pin in Cinch Video in Cinch Stereo in Mini SD Card Slot in
Ceiling Mounting	Yes
Power	25W
Size WxHxD	155 x 50 x 125 mm (6,1"x2"x4,9") 0,97 L/dm³
Operating Noise	28dB
Weight	1,20 kg / 2,65 lbs.
Keystone	Vert.: +/-40°
Illumination	90%

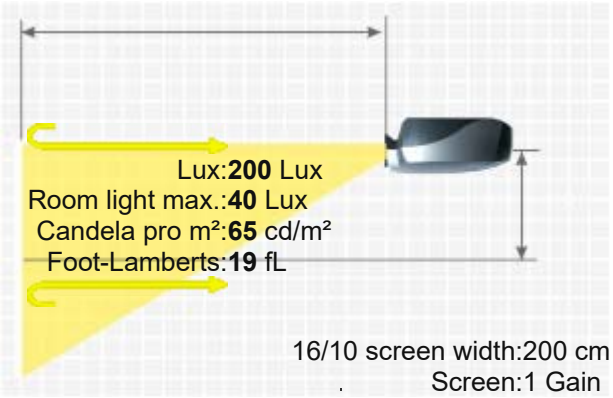



Frequenz	-
Foot-Lamberts	19 fL / max. 227 cm screen width
	65 cd/m²
Features	-
Status	2012 Discontinued (EOL) // Last update of the data: 2024-10-02
Data	
More Details	https://www.projector-database.com/pro/allyc5-en.html

Due to our ongoing commitment to continuously improve the quality of our projector database, this brochure is also subject to change without notice. HCinema is not responsible for any errors or omissions contained in product descriptions.