ACTO RAC400



3LCD | Kurzdistanz | Netzwerk | USB

Brief Introduction Beta 2.5	The RAC400 LCD has 3200 Ansi lumens, a contrast of 3200:1 and a WXGA 1280 x 800 resolution. The lamp in the projector is specified with a lamp life of 4000 hours, which is over 5.5 years with two hours of use every day. As it is a short-throw projector, the projector can be placed very close to the wall. For a 2 m wide image, the projector only needs to be 66 cm away from the screen. The model was built by ACTO in 2013 and is no longer current.		
Display Type	3 x 0,59" LCD TFT Panel WXGA 16/10 Liquid Crystal Display		
Ansi-Lumen	Projector: 3200	Screen: 1280 Lux (bei 200 cm Screen)	
Contrast	3200:1 full on/off	3200:1 full on/off	
Black Level	1,0000 min. Lumen	0,4 min. Lumen	
Offset	-		
Resolution	WXGA 1280 x 800 1.024.000 Pixel		
Video Modes	Pal, SECAM, NTSC, HDTV 720p, 1080i, EDTV 480p, 576p		
Disc Recognition	DVD | HD Blu-ray (komprimiert) | ~~3D Blu-ray~~ | ~~4K UHD Blu-ray~~		
Application	Short Distance | Medium screen width or rooms with a little more ambient light, max. 200 lumens.		
Light Source	245W UHP Lamp		
Light Life	4000 h. 6000 h. in Eco Mode		
Operating Costs	-		
Focus	Manual		
Zoom	No Zoom		
Objective	F=1,8 f=4,21mm		
Throw Ratio	0,33:1		
Audio	10W Mono		
Connections	HDMI D-sub 15pin in und out YUV in Cinch Video in Cinch Stereo in S-Video in Mini Jack Audio in und out USB Typ B RS232C Din 9 pin in RJ45 in		
Ceiling Mounting	Yes		
Power	300W		
Size WxHxD	420 x 110 x 345 mm (16,5"x4,3"x13,6") 15,94 L/dm³		
Operating Noise	36dB		
Weight	5,00 kg / 11,02 lbs.		
Keystone	Vert.: +/-5°		
Illumination	75%		

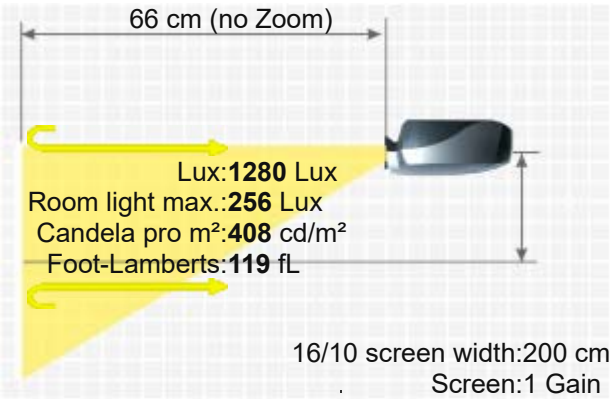



ACTO RAC400

Frequenz	H-sync: 15-100 kHz V-sync: 48-85 Hz
Foot-Lamberts	119 fL / max. 575 cm screen width 408 cd/m²
Features	■ Eco Mode ■ Lan network compatible. ■ Short-throw projector
Status	2013 Discontinued (EOL) // Last update of the data: 2023-08-04
Data	
More Details	https://www.projector-database.com/pro/actorac400-en.html



Due to our ongoing commitment to continuously improve the quality of our projector database, this brochure is also subject to change without notice. HCinema is not responsible for any errors or omissions contained in product descriptions.