ACTO AT X5280



3LCD Pointer USB

Brief Introduction Beta 2.5	The standard portable AT X5280 LCD has 2800 Ansi lumens, a contrast of 600:1 and an XGA 1024 x 768 resolution. A built-in horizontal and vertical keystone correction provides freedom when positioning the projector. An image width of up to 461 cm is possible. However, the image should be smaller in room light. We recommend max. 307 cm. At just 30 decibels, the device is one of the quieter projectors. The model was built by ACTO in 2007 and is no longer current.
Display Type	3 x 0,7" LCD TFT Panel XGA 4/3 Liquid Crystal Display

	Projector	Screen
Ansi-Lumen	2800	933 Lux (bei 200 cm Screen)
Contrast	600:1 full on/off	600:1 full on/off
Black Level	4,6667 min. Lumen	1,563 min. Lumen

Offset	-
Resolution	XGA 1024 x 768 786.432 Pixel
Video Modes	PAL, SECAM, NTSC, HDTV 720p, 1080i, EDTV 480p, 576p
Application	Standard-Portabel | External training and company presentations, as well as product presentations. Medium screen width or rooms with little light, max. 100 lumens.
Light Source	230W Lamp
Light Life	2000 h.
Operating Costs	-
Focus	Manual
Zoom	Manual 1,19
Objective	F=1,8-2,1 f=26,5-31,5 mm
Throw Ratio	1,86-2,21:1
Audio	2W
Connections	D-sub 15pin in und out S-video in Cinch Video in Mini Jack Audio in und out USB Maus Port RS232C
Ceiling Mounting	-
Power	300W
Size WxHxD	310 x 96 x 270 mm (12,2"x3,8"x10,6") 8,04 L/dm³
Operating Noise	30dB
Weight	2,60 kg / 5,73 lbs.
Keystone	Vert.: +/-30° Hori.: +/-30°
Illumination	95%
Frequenz	-
Foot-Lamberts	87 fL / max. 461 cm screen width 298 cd/m²

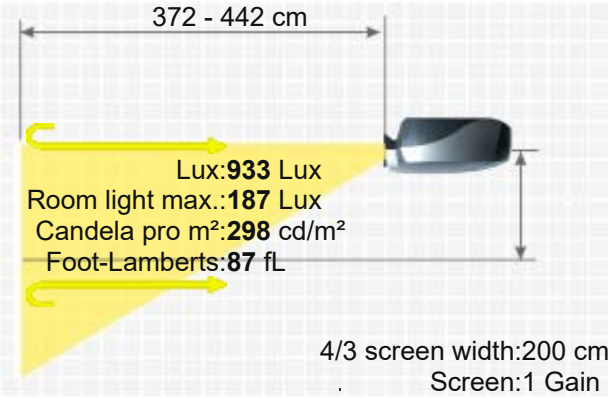

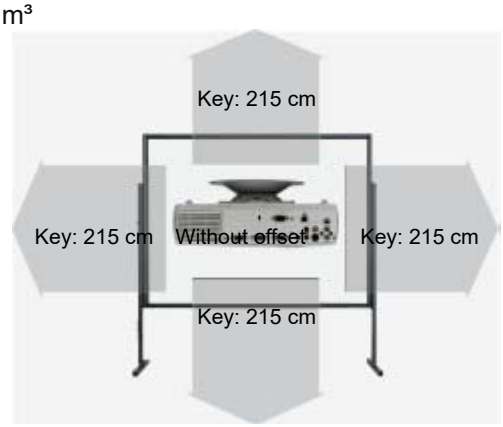

ACTO AT X5280

	■ Freeze
Features	■ Remote control with laser pointer
	■ Digital zoom 16x
Status	2007 Discontinued (EOL) // Last update of the data: 2023-08-04
Data	
More Details	https://www.projector-database.com/pro/actoatx5280-en.html

Due to our ongoing commitment to continuously improve the quality of our projector database, this brochure is also subject to change without notice. HCinema is not responsible for any errors or omissions contained in product descriptions.