ACTO AT FD200FX



Brief Introduction Beta 2.5	The AT FD200FX DLP has 2500 Ansi-Lumen, a contrast of 2000:1 and an SVGA 800 x 600 resolution. The projector will be able to illuminate a picture width of 435 cm well. However, if room light is available, the picture width should ideally not exceed 290 cm. It was launched in 2009 and is no longer offered by the manufacturer ACTO.
Display Type	1 x DLP Chip SVGA 4/3 Ti Digital Light Processing Chip
Ansi-Lumen	Projector: 2500 / Screen: 833 Lux (bei 200 cm Screen)
Contrast	Projector: 2000:1 full on/off / Screen: 2000:1 full on/off
Black Level	Projector: 1,2500 min. Lumen / Screen: 0,417 min. Lumen
Offset	-
Resolution	SVGA 800 x 600 480.000 Pixel
Video Modes	PAL, SECAM, NTSC, HDTV 720p, 1080i, EDTV 480p, 576p
Application	Standard-Portabel | External training and company presentations, as well as product presentations. Medium screen width or rooms with little light, max. 100 lumens.
Light Source	180W Lamp
Light Life	-
Operating Costs	-
Focus	Manual
Zoom	Manual
Objective	-
Throw Ratio	-
Audio	-
Connections	D-sub 15 pin in S-Video in Cinch video in RS232C USB Typ B
Ceiling Mounting	Yes
Power	230W
Size WxHxD	-
Operating Noise	34 / 32 dB in Eco Mode
Weight	2,70 kg / 5,95 lbs.
Keystone	-
Illumination	-
Frequenz	H-sync: 15-100 kHz V-sync: 43-120 Hz
Foot-Lamberts	77 fL / max. 435 cm screen width 264 cd/m²
Features	■ Eco Mode
Status	2009 Discontinued (EOL) // Last update of the data: 2023-08-04
Data	

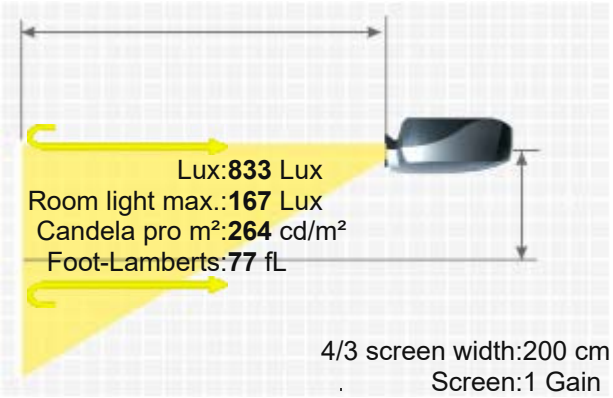

More Details

HCinema

https://www.projector-database.com/pro/actoatfd200fx-en.html

Due to our ongoing commitment to continuously improve the quality of our projector database, this brochure is also subject to change without notice. HCinema is not responsible for any errors or omissions contained in product descriptions.