NexGen NHT 576



With the NHT 576, manufacturer NexGen offers a DLP projector with WPAL 1024 x 576 resolution and a contrast of 2500:1. The integrated lens shift gives freedom when positioning the projector. An image width of up to 287 cm is possible as the projector has 800 Ansi lumens. However, if there is room light, the picture should be a maximum of 191 cm wide. The projector is very quiet compared to others with 29 decibels of operating noise. The projector is no longer sold by the manufacturer.

Brief Introduction
Beta 2.5

Display Type	1 x DLP Chip WPAL 16/9 Ti Digital Light Processing Chip	
Ansi-Lumen	800	345 Lux (bei 203 cm Screen)
Contrast	2500:1 full on/off	2500:1 full on/off
Black Level	0,3200 min. Lumen	0.138 min. Lumen
Lens shift	Vert.: +/-50% Hori.: +/-7,5%	
Resolution	WPAL 1024 x 576 489.824 Pixel XGA 1024 x 768 compressed	
Video Modes	NTSC, PAL, SECAM, HDTV 1080i, 720p	
Disc Recognition	DVD | HD Blu-ray (komprimiert) | ~~3D Blu-ray~~ | ~~4K UHD Blu-ray~~	
Application	Homeciname | Small screen width, rooms with very little ambient light below 100 lumens.	
Light Source	250W / 200W im Eco Mode Lamp Articel Nr.: LMP17747	
Light Life	2000 h.	
Operating Costs	-	
Focus	Manual	
Zoom	Manual 1,22	
Objective	F=2,4-2,5 f=19,1-23,3 mm	
Throw Ratio	1,34-1,675:1	
Audio	-	
Connections	D-sub 15pin in 2 x YUV in Cinch Video in S-Video in DVI-D mit HDCP in 2 x RS232C 2 x IR Receiver in	
Ceiling Mounting	Yes	
Power	370 / 320W in Eco Mode	
Size WxHxD	324 x 306 x 144 mm (12,8"x12"x5,7") 14,28 L/dm³	

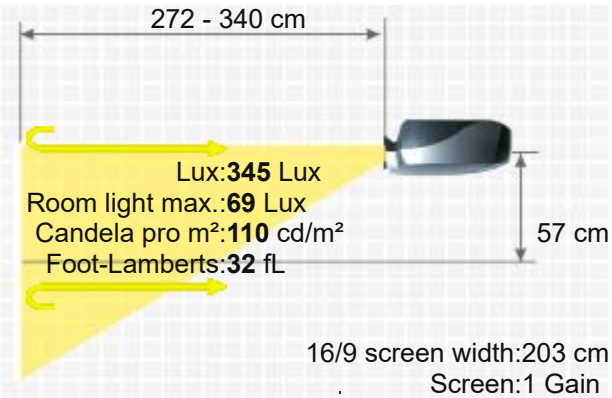

NEXGEN NHT 576

Operating Noise	29dB
Weight	6,40 kg / 14,11 lbs.
Keystone	Vert.: +/-15°
Illumination	90%
Frequenz	-
Foot-Lamberts	32 fL / max. 287 cm screen width 110 cd/m²
Features	■ Lens shift Funktion ■ Eco Mode ■ 5x speed 6-segment colour wheel ■ De-interlacer with 3:2 2:2 pull down
Please note	Der Projektor wurde über Nexgen, Nextvision und wird jetzt über Metavision vertrieben.
Status	- Discontinued (EOL) // Last update of the data: 2023-08-04

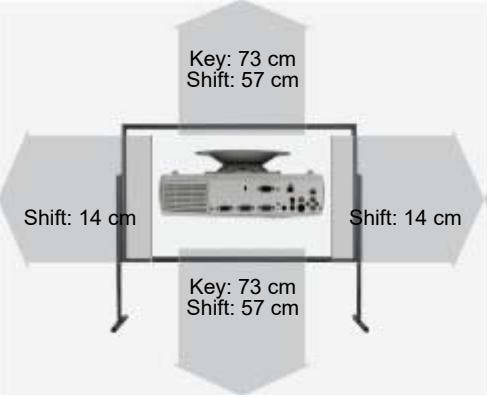

Data



More Details

HCinema

https://www.projector-database.com/pro/NexgenNHT576-en.html

Due to our ongoing commitment to continuously improve the quality of our projector database, this brochure is also subject to change without notice. HCinema is not responsible for any errors or omissions contained in product descriptions.