Innoio IC200C



Brief Introduction Beta 2.5	The Innoio model IC200C is an LCOS LED projector with VGA 640 x 480 resolution and a contrast of 800:1. The service life of the LEDs is 10,000 hours, which is over 6.8 years with a daily viewing time of 4 hours. On the market since 2013, the model is no longer offered by the manufacturer Innoio.
Display Type	 1 x DLP Chip VGA 4/3 Liquid Crystal on Silicon (LCOS)
Projector / Screen	
Ansi-Lumen	35 / 12 Lux (bei 200 cm Screen)
Contrast	800:1 full on/off / 800:1 full on/off
Black Level	0,0438 min. Lumen / 0,015 min. Lumen
Offset	-
Resolution	VGA 640 x 480 307.200 Pixel
Video Modes	Pal, SECAM, NTSC,
Application	Game-Portabel | Very portable, small-screen projections. Very narrow picture width and rooms with very little light.
Light Source	LED
Light Life	10000 h.
Operating Costs	0,00 € LED
Focus	Manual
Zoom	No Zoom
Objective	-
Throw Ratio	-
Audio	-
Connections	HDMI in
Ceiling Mounting	-
Power	-
Size WxHxD	50 x 50 x 50 mm (2"x2"x2") 0,13 L/dm³
Operating Noise	-
Weight	0,100 kg / 0,22 lbs.
Keystone	-
Illumination	-
Frequenz	-

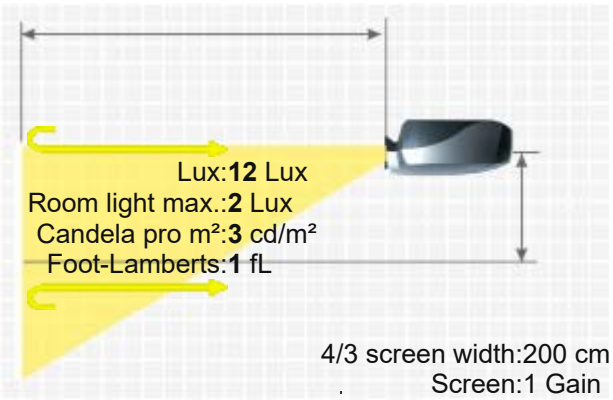

INNOIO IC200C

Foot-Lamberts	1 fL / max. 52 cm screen width
	3 cd/m²
Features	-
Status	2013 Discontinued (EOL) // Last update of the data: 2023-08-04

Data



More Details

HCinema

https://www.projector-database.com/pro/Innoioic200c-en.html

Due to our ongoing commitment to continuously improve the quality of our projector database, this brochure is also subject to change without notice. HCinema is not responsible for any errors or omissions contained in product descriptions.